MINE REAR TIPPER TYPE 'W1RB25'

TECHNICAL SPECIFICATIONS

- L - overall length without roof approx. 6700 mm
- B - overall width approx. 2550 mm
- H - height of the sides approx. 1800 mm
- V - volume approx. 23 m3
- floor 13 mm wear-resistant steel HARDOX TUF 500,
- rear raised for the discharge,
- side walls 8 mm wear-resistant steel HARDOX TUF 500,
- front wall 8 mm wear-resistant steel HARDOX TUF 500,
- 8 mm HARDOX TUF 500 wear-resistant steel tailgate automatically opened on ropes,
- roof protecting the entire cabin,
- upper profiles additionally reinforced,
- rear raised for the discharge,
- intermediate frame made of a closed profile,
- reinforced tipping axle of the body,
- scissor stabilizer,

HYDRAULICS

- HYVA type FE hydraulic cylinder with end position protection,
- HYVA110l hydraulic pump + hydraulic hoses,
- oil tank with HLP32 oil,
- pneumatic tipping control from the cabin,
- manual pump for emergency lifting of the body,
- signalling of raised buildings,

EQUIPMENT

- entrance ladder on the left,
- Volvo factory rear bumper
- aluminum side barriers according to homologation,
- repair support under the cargo box,
- elastic rubber fenders,
- rear lamps on flexible mounting with cover grilles,
- two working lights switched on by a button from the cabin,
- reflective boards,
- shot-blasted dump truck primed in white cabin color...
- body mounted on the chassis

Body weight: approx. 9,000 kg (+/-2%)

Chassis equipped: PTO from gearbox, intermediate frame mounts, rear bumper.

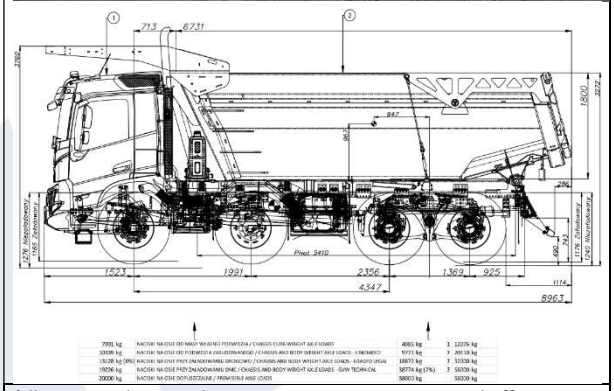

*illustrative drawing does not constitute a commercial offer.

HANSA Sp. z o.o.
ul. ks. P. Ściegiennego 236
25-116 Kielce
tel.: 0048 41 343 50 00
www.hansa-europe.com